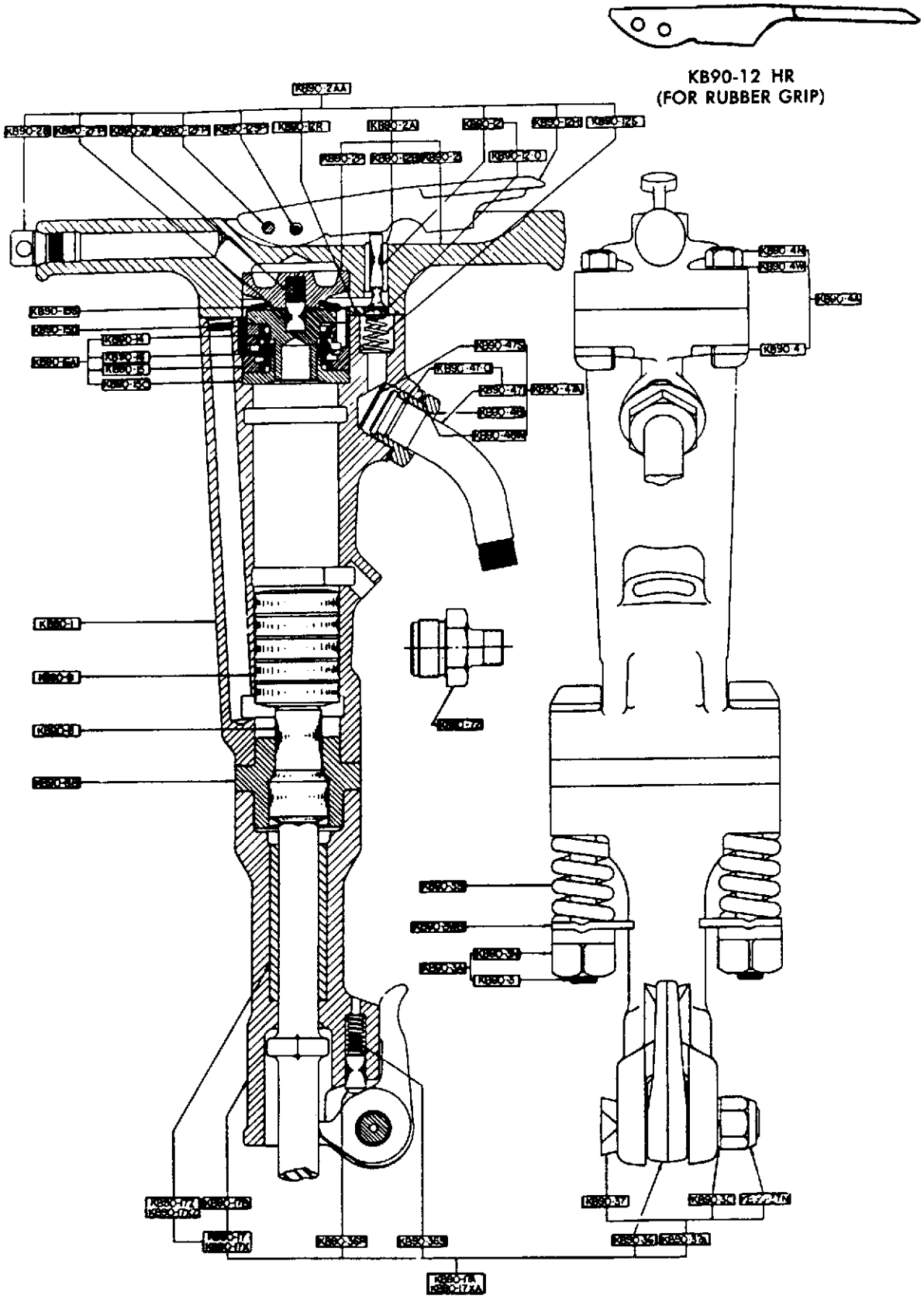
KB90-12 HR
(FOR RUBBER GRIP)